Solutions for Lead-Acid Batteries, Lithium-Ion Batteries, and Fuel Cells

Anton Paar

Batteries & Fuel Cells

Measuring Instruments for Optimized **Battery** and **Fuel Cell** Production

Successful manufacturing and performance of batteries and fuel cells rely on a suitable combination of functional materials with the right physicochemical properties.

Anton Paar has the tools to help you characterize, monitor, and investigate your battery's or fuel cell's key components. With the broadest portfolio of measuring instruments, we have a solution for your challenges in the research, production, and maintenance of lead-acid batteries, lithium-ion batteries and fuel cells.

01 LEAD-ACID BATTERIES

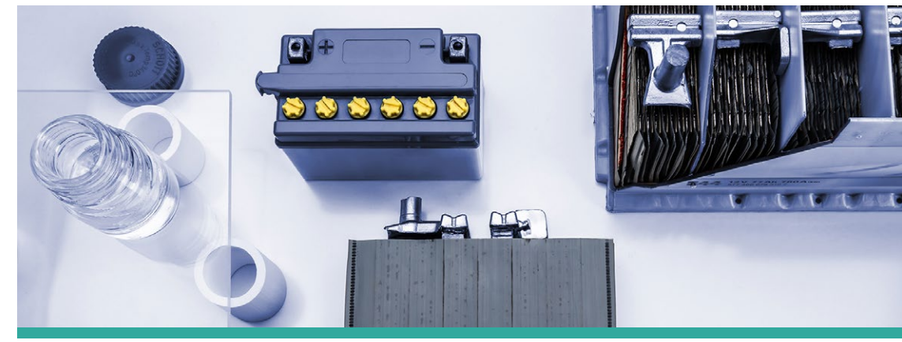

02 LITHIUM-ION BATTERIES

03 FUEL CELLS

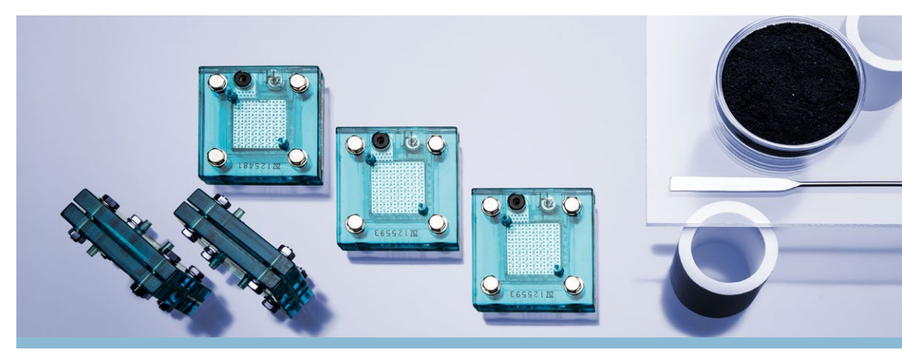

01

SOLUTIONS FOR LEAD-ACID BATTERIES

Whether you are producing, maintaining, or servicing lead-acid batteries, you want to know the concentration of sulfuric acid in the battery and therefore the state of charge. To determine the concentration, use a digital density meter or digital hydrometer, either in your laboratory or out in the field.

LEAD-ACID BATTERY MANUFACTURING

During production, using a digital density meter is the most convenient way to measure the concentration of sulfuric acid at these stages:

- For diluting H_2SO_4 to the needed concentration
- During formation of the plates
- After charging of the batteries
- After filling and loading
- Before shipment after storing the batteries

LEAD-ACID BATTERY MAINTENANCE OR SERVICE

Regular checks on lead-acid batteries in uninterruptable power supply (UPS) systems monitor the state of charge and the state of health, and detect the weak batteries in the system. To keep the lead-acid battery in good shape over its entire life cycle, it is crucial to regularly check the concentration of sulfuric acid, for example with a portable digital hydrometer (digital density meter).

Your benefits of using a digital density meter:

- Maximum safety and convenience with on-site measurement at the production site, in the laboratory, directly out of the battery, and for use in the field
- Coverage of the whole sulfuric acid concentration range needed in the production process
- Cost savings due to small sample volume of only 2 mL
- Time savings thanks to the determination of the concentration of the electrolyte solution in less than two minutes
- Automatic display of the specific gravity (or density) result, compensated to 20 °C, the concentration of H_2SO_4 in %w/w or converted into SG 80/80 and other units as you require

To find out more, visit:

www.anton-paar.com/lead-acid-batteries

02

SOLUTIONS FOR LITHIUM-ION BATTERIES

Anton Paar delivers solutions for the quality control of raw materials, electrolytes, and solvents, and helps you characterize active materials for research and product development.

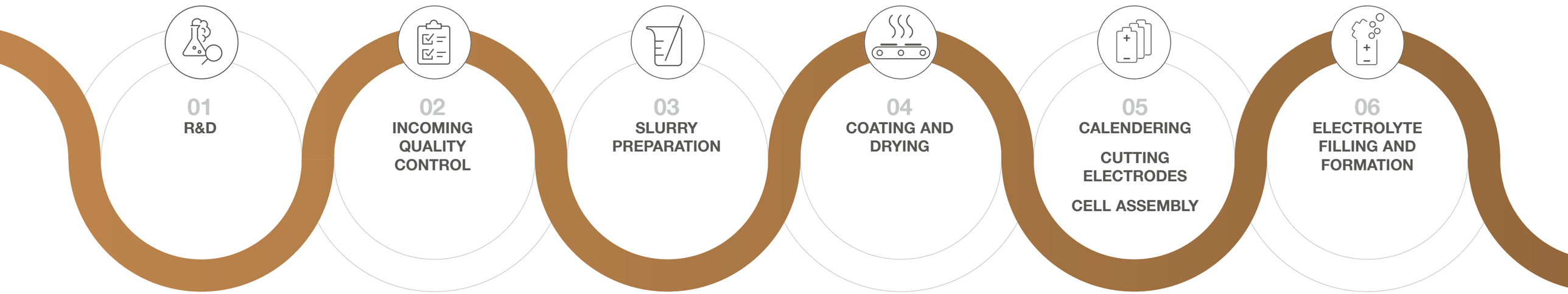

YOU NEED TO IMPROVE YOUR BATTERIES' PERFORMANCE PARAMETERS, E.G. CHARGE/DISCHARGE BEHAVIOR, CAPACITY, POWER DENSITY?

Solution: Take a closer look at the particle size and surface area, and adjust these to achieve maximum performance with a particle size analyzer.

YOU WANT TO MAKE SURE THAT THE DELIVERED ELECTRODE SOLIDS HAVE THE REQUIRED CHARACTERISTICS BEFORE SLURRY PREPARATION?

Solution: Measure the surface area by gas adsorption to ensure the electrodes have a predictable and reproducible charge/discharge performance, with an instrument for surface and pore size analysis.

YOU WANT TO AVOID UNNECESSARY AGITATION OF THE SLURRY DURING MIXING, AS THIS DEGRADES INTERNAL STRUCTURES OVER TIME?

Solution: Find out more about the right combination of mixing speed, time, and temperature for the slurry by simulating the mixing process under varying conditions with a rheometer. Additional benefit: You can greatly reduce material costs.

YOU NEED TO CHECK THE INITIAL DENSITY BEFORE CALENDERING?

Solution: Measure the true density by gas pycnometry with an instrument from the surface and pore size analysis portfolio, to avoid cycle time problems and capacity loss.

YOU WANT TO OPTIMIZE MATERIALS AND PROCESS PARAMETERS?

Solution: Measure the quantitative pore volume and pore size distribution to understand the porosity of the dry electrode by means of mercury intrusion porosimetry.

YOU NEED TO CHECK THE QUALITY OF ELECTROLYTES BEFORE FILLING, TO AVOID DELIVERING BATTERIES WITH POOR PERFORMANCE?

Solution: Quick quality checks with a digital density meter can ensure quality and reduce potential problems resulting from poor-quality raw materials.

To read about more challenges and solutions in lithium-ion battery production and discover our instrument portfolio, visit:

www.anton-paar.com/li-ion

02

SOLUTIONS FOR LITHIUM-ION BATTERIES

DENSITY, REFRACTIVE INDEX, AND CONCENTRATION MEASUREMENT FOR:

- Quality control of incoming chemicals
- Quality control of slurry composition
- Quality control of electrolytes - whether liquid or polymer

Resulting in: less waste of precious compounds, useful insights into new materials, time efficiency

01 | R&D
02 | INCOMING QUALITY CONTROL
03 | SLURRY PREPARATION

PARTICLE CHARACTERIZATION FOR:

- Optimizing the performance of the electrode via analysis of the particle size and particle size distribution
- Ensuring high homogeneity of the slurry by determing particle size and zeta potential

Resulting in: efficient electrode production, ideal slurry for the next production steps, high homogeneity during slurry production

01 | R&D 02 | INCOMING QUALITY CONTROL
03 | SLURRY PREPARATION

SURFACE AND PORE SIZE ANALYSIS FOR:

- Gaining knowledge of the surface area and pore size of active materials and separators so you can optimize them for the intended pouch size or other type of cell
- Quality checks on incoming raw materials to make sure you only use high-quality components

Resulting in: final products that meet performance specifications

01 | R&D 02 | INCOMING QUALITY CONTROL
04 | COATING AND DRYING

SURFACE CHARACTERIZATION FOR:

- Measuring the adhesion of the coating on the electrodes in order to select the right process parameters so that there is no risk of delamination
- Investigating the correlation between surface zeta potential and adhesion so you can take steps to prevent electrode failure

Resulting in: reliable electrode coating for long-life batteries

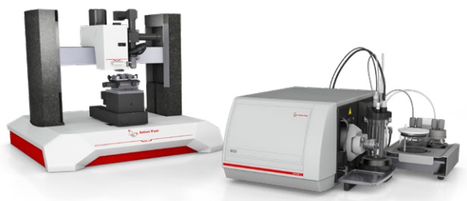

01 | R&D 04 | COATING AND DRYING

VISCOSITY MEASUREMENTS AND RHEOLOGICAL INVESTIGATIONS FOR:

- Measuring the viscosity of slurry so you can adjust it to have the ideal pumping behavior
- Simulating the sedimentation of layers and structural recovery after layer application so you can understand how to optimize the layer composition
- Knowledge about the electrolyte's viscosity to ensure the development of high-performance electrolytes that enable fast charging and discharging over a wide temperature range

Resulting in: efficient pumping, well-performing layers

01 | R&D 03 | SLURRY PREPARATION
04 | COATING AND DRYING
06 | ELECTROLYTE FILLING AND FORMATION

02

SOLUTIONS FOR LITHIUM-ION BATTERIES

MICROWAVE DIGESTION AND MICROWAVE SYNTHESIS FOR:

01 | R&D 02 | INCOMING QUALITY CONTROL

- Creating novel materials used in anodes, cathodes, and separators (also combinable with Raman spectroscopy in order to optimize reaction time)
- Optimizing the sample preparation for the subsequent elemental analysis

Resulting in: convenient and safe synthesis of novel materials that can revolutionize batteries and their performance, reproducibly prepared samples

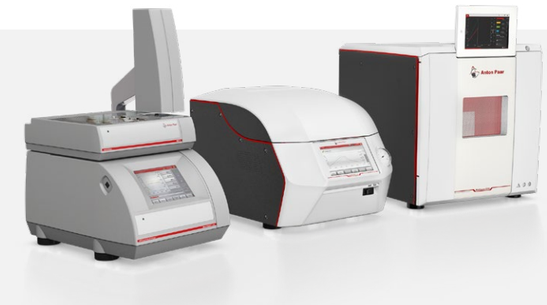

SMALL-ANGLE X-RAY SCATTERING FOR:

01 | R&D

- Following the electrochemical processes in-situ to maximize capacity and performance
- Understanding how electrodes work on a nanometer level

Resulting in: improved battery capacity and lifetime

RAMAN SPECTROSCOPY FOR:

02 | INCOMING QUALITY CONTROL

- Verifying incoming raw materials, even solids such as membrane materials and graphene
- Covering a wide range of samples with the option of two different wavelengths in one instrument

Resulting in: fast, accurate, and non-invasive analysis, even through packaging

FLASH POINT TESTING FOR:

01 | R&D

- Determining the thermal safety of your lithium-ion batteries
- Guaranteeing the consistent quality of your products, supported by the ceramic-coated electric igniter and optimized cooling technology, saving valuable time and money

Resulting in: optimization of thermal safety behavior and better battery performance

03

SOLUTIONS FOR FUEL CELLS

Fuel cell development and production involves nanoscale engineering: optimizing and controlling both the particle size of the catalyst and the fluid transport properties of gases and vapors. Particle size analysis on the micrometer scale also plays a major part in the effective fabrication of electrode materials.

To find out more, visit:

www.anton-paar.com/fuel-cell

03

SOLUTIONS FOR FUEL CELLS

ANTON PAAR INSTRUMENTS FOR DETERMINING PARTICLE SIZE, ZETA POTENTIAL, AND PORE SIZE HELP YOU WITH COMMON CHALLENGES

Gas diffusion layer:
- Achieve better fuel cell performance by optimizing fluid permeability by measuring the pore size distribution.
- Ensure consistent and sufficient fluid transport by controlling flooding by measuring the hydrophobicity via water vapor sorption.

Catalyst:
- Build fuel cells that maintain their activity by quantifying the active metal area and dispersion by chemisorption.
- Improve the catalytic activity by determining the particle size.
- Determine the final concentration of noble metals used in catalysts with excellent sample preparation and subsequent elemantal analyis.

Catalysts support:
- Minimize the variability of batches of carbon before they are used by obtaining a consistent surface area and pore volume of nanoporous carbon by measuring the pore size distribution.

Electrodes:
- Significantly improve fuel cell performance by optimizing the electrode properties by measuring the particle size distribution.
- Study electrodes in-situ during electrochemical cycling by using SAXS.

Proton exchange membrane:
- Optimize the durability of the proton exchange membrane by measuring the surface zeta potential.
- Optimize the preformance of PEMs with SAXS.

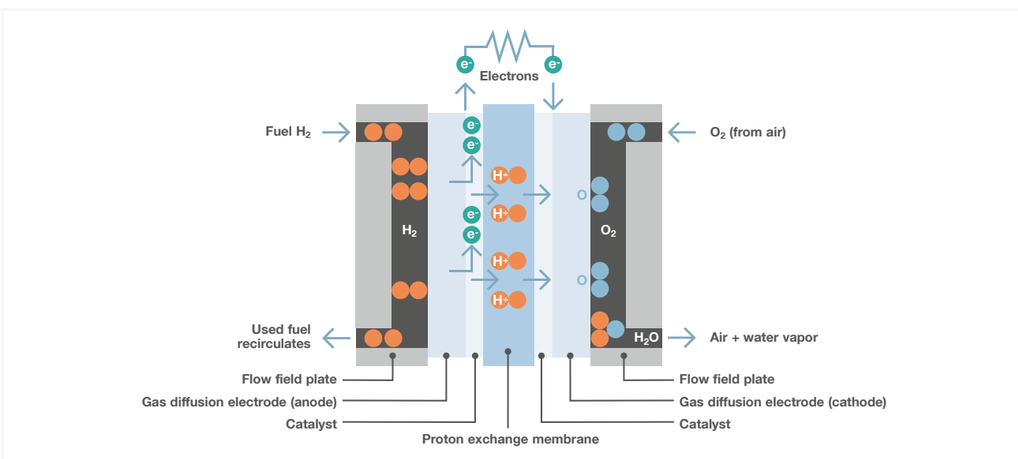

To find out more, visit:

www.anton-paar.com/fuel-cell

Anton Paar
Certified Service

“We’re confident in the high quality of our instruments. That’s why we provide **a full warranty for three years**.”

All new instruments* include repair for three years.
You avoid unforeseen costs and can always rely on your instrument.
Alongside the warranty, we offer a wide range of additional services and maintenance options.

*Due to the technology they use, some instruments require maintenance according to a maintenance schedule. Complying with the maintenance schedule is a prerequisite for the three-year warranty.

SERVICE AND SUPPORT DIRECTLY FROM THE MANUFACTURER

Our comprehensive service provides you with the best individual coverage for your investment so that maximum uptime is ensured.

SAFEGUARDING YOUR INVESTMENT
Regardless of how intensively you use your instrument, we help you keep your device in good shape and safeguard your investment – including a three-year warranty.

THE SHORTEST RESPONSE TIMES
We know that sometimes it’s urgent. That’s why we provide a response to your inquiry within 24 hours. We give you straightforward help from real people, not from bots.

CERTIFIED SERVICE ENGINEERS
The seamless and thorough training of our technical experts is the foundation of our excellent service provision. Training and certification are carried out at our own facilities.

OUR SERVICE IS GLOBAL
Our large service network for customers spans 86 locations with a total of 350 certified service engineers. Wherever you’re located, there’s always an Anton Paar service engineer nearby.

© 2022 Anton Paar GmbH | All rights reserved.
Specifications subject to change without notice.
XPAIP155EN-LTR-D

www.anton-paar.com